1. General Description

A: COMPONENT

1. UNDER COVER

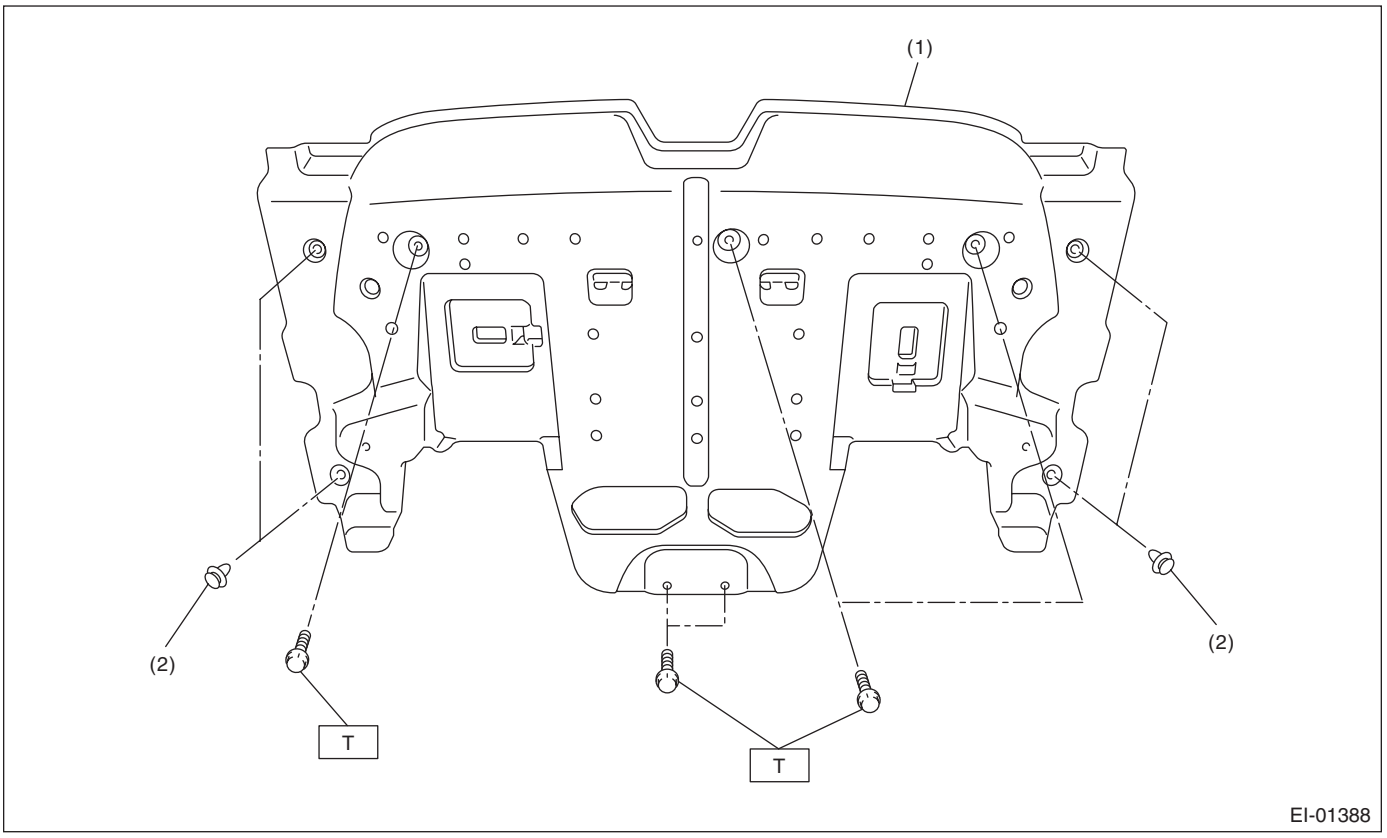

(1) Under cover

(2) Clip (side)

Tightening torque:N·m (kgf-m, ft-lb)
T: 14 (1.4, 10.3)

2. FRONT HOOD GRILLE

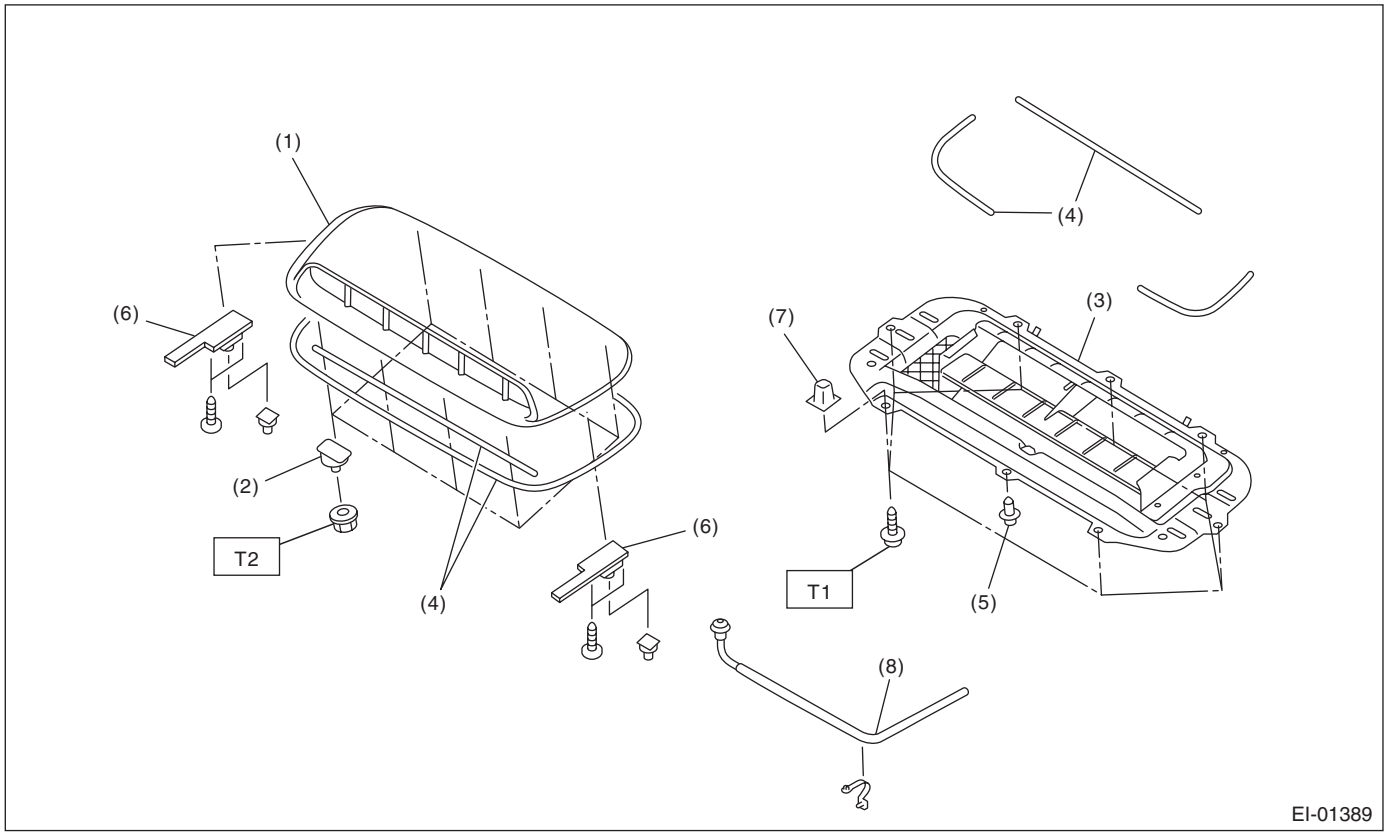

(1)	Front hood grille	(6)	Side plate	***Tightening torque:N·m (kgf-m, ft-lb)***
(2)	Bolt	(7)	Grommet	***T1: 1.0 (0.1, 0.74)***
(3)	Grille duct	(8)	Intercooler water spray (STI model)	***T2: 4.5 (0.46, 3.32)***
(4)	Gasket			
(5)	Clip			

3. FRONT BUMPER

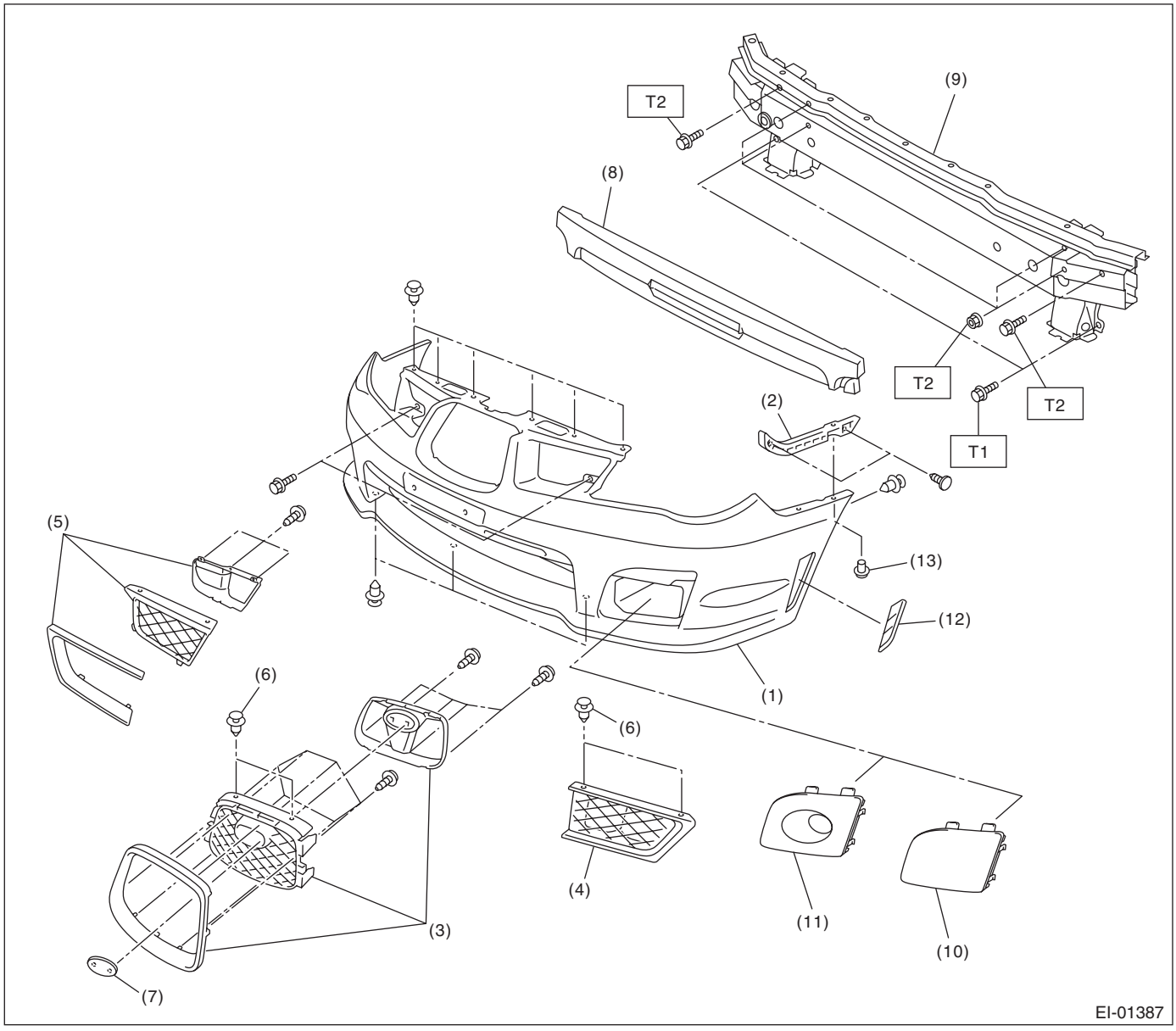

(1)	Bumper face	(7)	Front grille emblem	(13)	Clip (Sedan model)
(2)	Slider	(8)	Energy absorber foam		
(3)	Front grille center	(9)	Front bumper beam ASSY		
(4)	Front grille LH	(10)	Fog light cover (STI model)		
(5)	Front grille RH	(11)	Fog light cover		
(6)	Clip	(12)	Cover side (STI model)		

Tightening torque:N·m (kgf-m, ft-lb)
T1: 32 (3.3, 24)
T2: 69 (7.0, 51)

4. REAR BUMPER

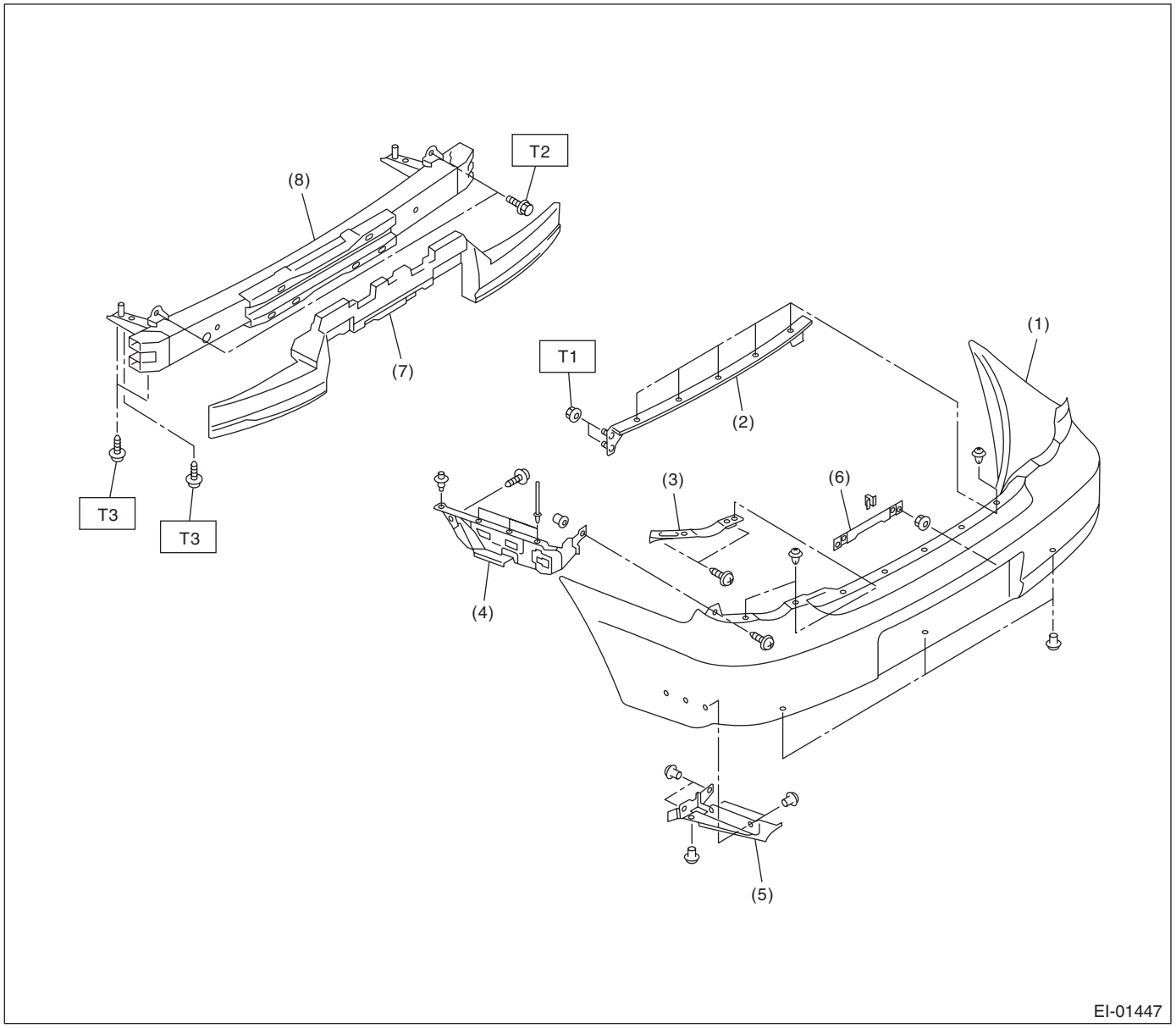

(1)	Bumper face	(5)	Bumper side cover	***Tightening torque:N·m (kgf-m, ft-lb)***
(2)	Bumper upper beam	(6)	License plate base	***T1: 33 (3.4, 24)***
(3)	Bumper upper bracket	(7)	Bumper energy absorber	***T2: 34 (3.5, 25)***
(4)	Bumper side bracket	(8)	Rear bumper beam ASSY	***T3: 95 (9.7, 70)***

5. MUD GUARD

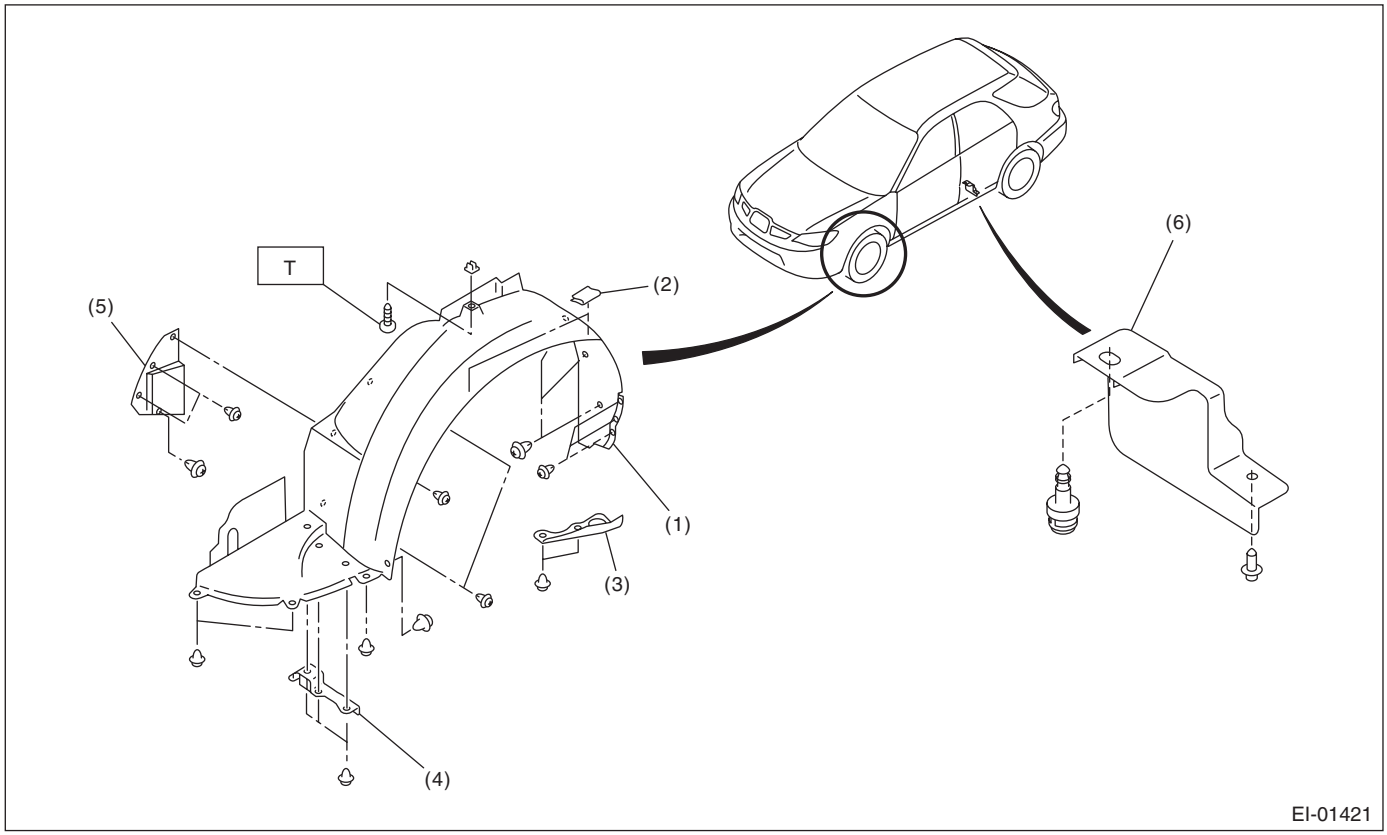

(1)	Mud guard	(4)	Front air flap plate
(2)	Clip	(5)	Mud guard plate (RH)
(3)	Sub frame cover	(6)	Rear air flap plate

Tightening torque:N·m (kgf-m, ft-lb)
T: 4.5 (0.46, 3.3)

6. COWL PANEL

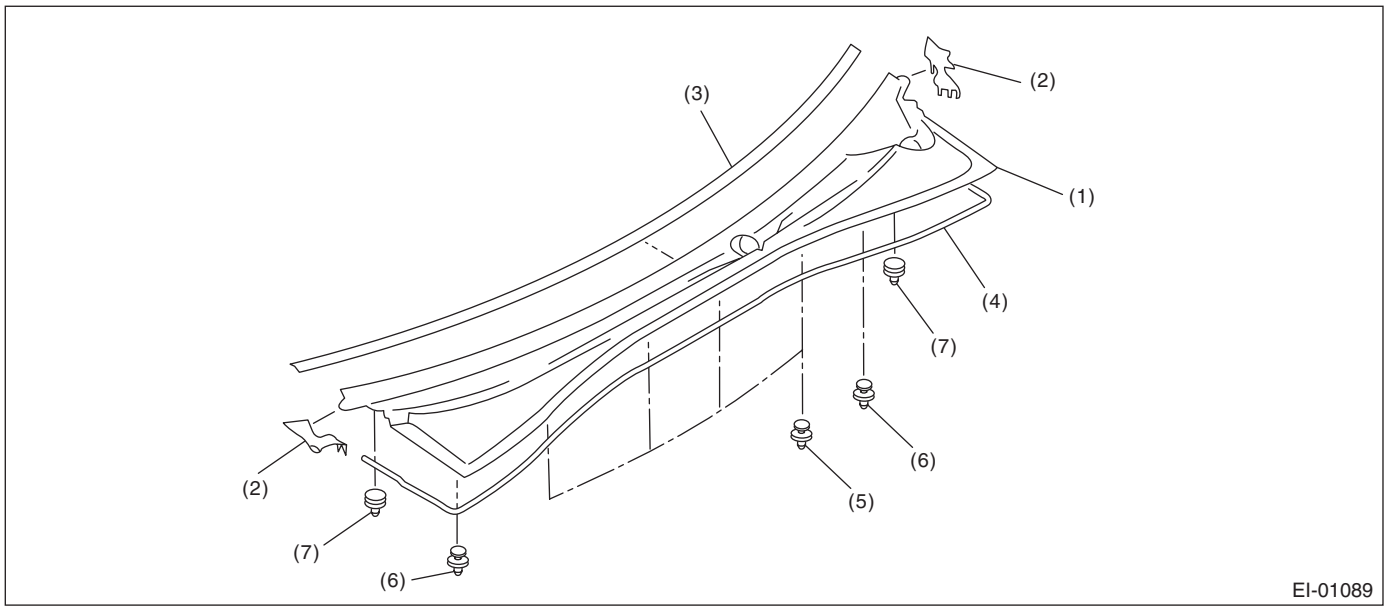

(1)	Cowl panel	(4)	Seal	(7)	Clip F
(2)	Cowl side panel	(5)	Clip		
(3)	Protector	(6)	Clip (pin)		

7. ROOF SPOILER

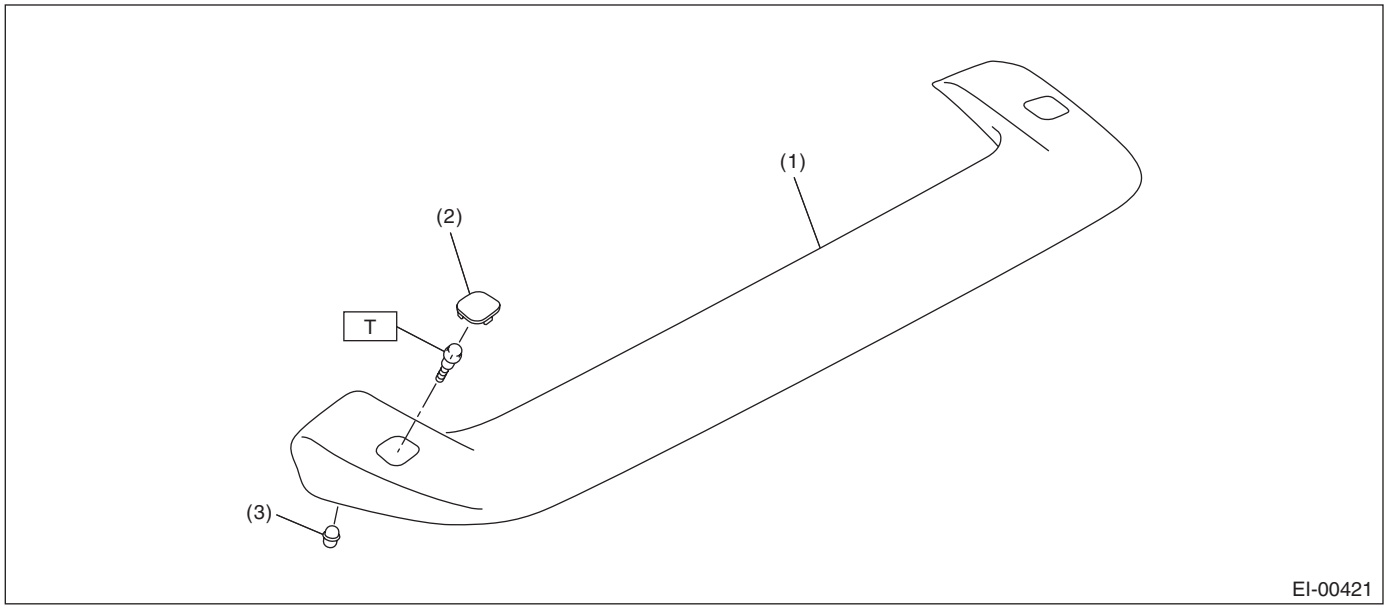

(1) Roof spoiler
(2) Cap
(3) Clip

Tightening torque:N·m (kgf-m, ft-lb)
T: 7.5 (0.76, 5.5)

8. REAR SPOILER

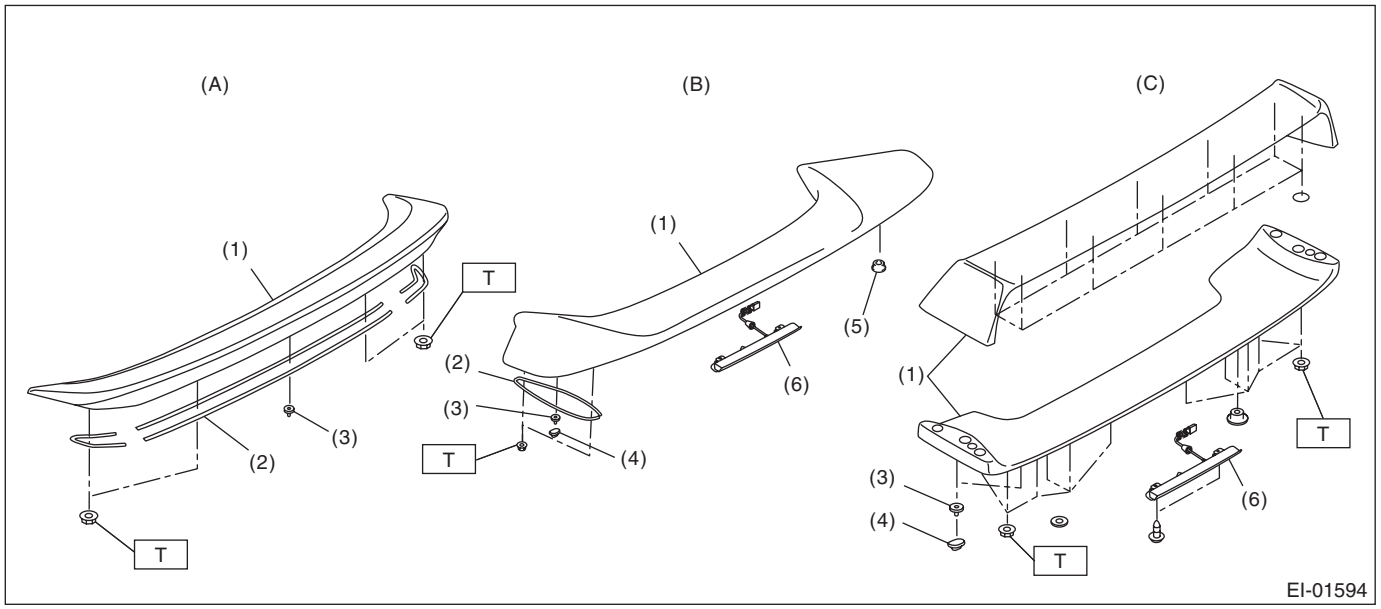

(A) Small type
(B) Medium type
(C) Large type

(1) Rear spoiler
(2) Protector
(3) Clip
(4) Grommet
(5) Seal (RH)
(6) High-mounted stop light

Tightening torque:N·m (kgf-m, ft-lb)
T: 7.5 (0.76, 5.5)

9. SIDE SILL SPOILER

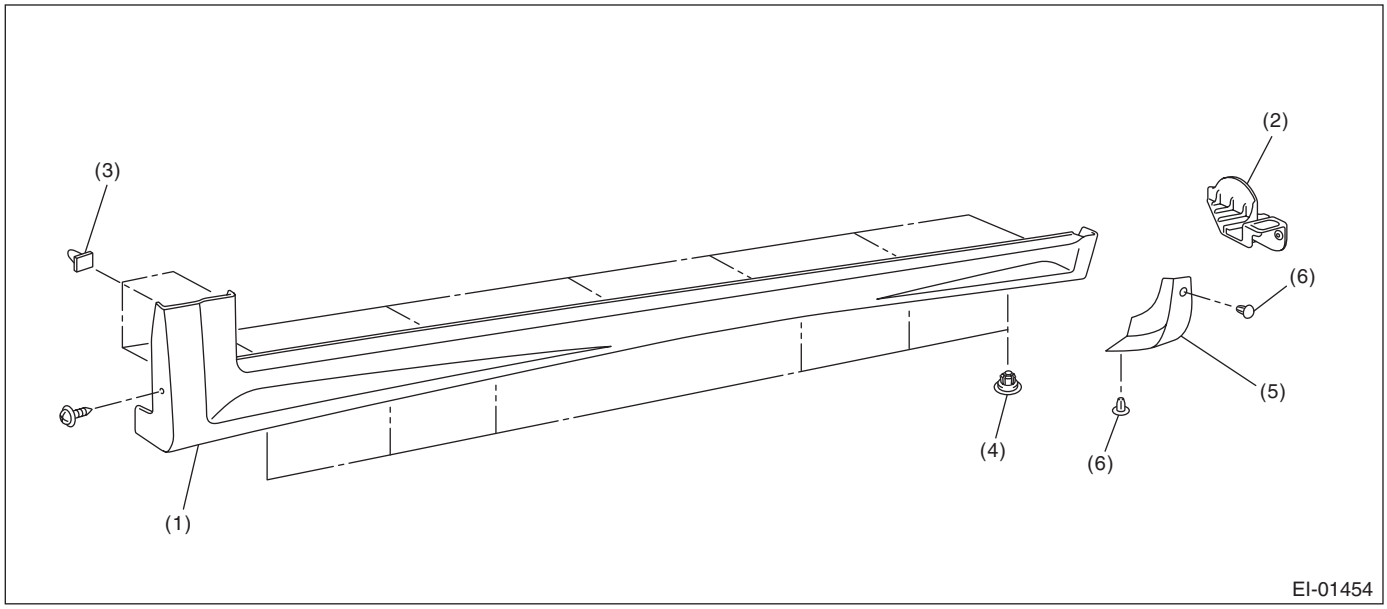

(1)	Side sill spoiler	(3)	Clip	(5)	End cover
(2)	Rear air flap plate	(4)	Clip (Side sill spoiler)	(6)	Clip

10. ROOF RAIL

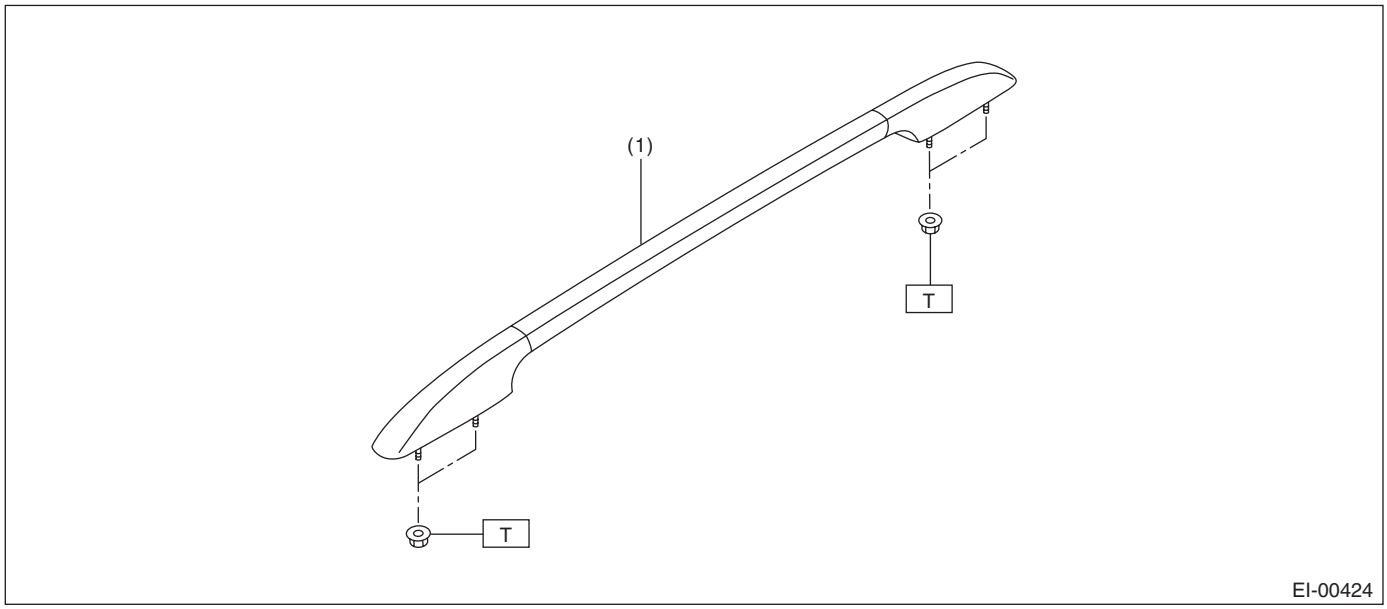

(1) Roof rail

Tightening torque:N·m (kgf-m, ft-lb)
T: 7.4 (0.75, 5.46)

11.ROOF MOLDING

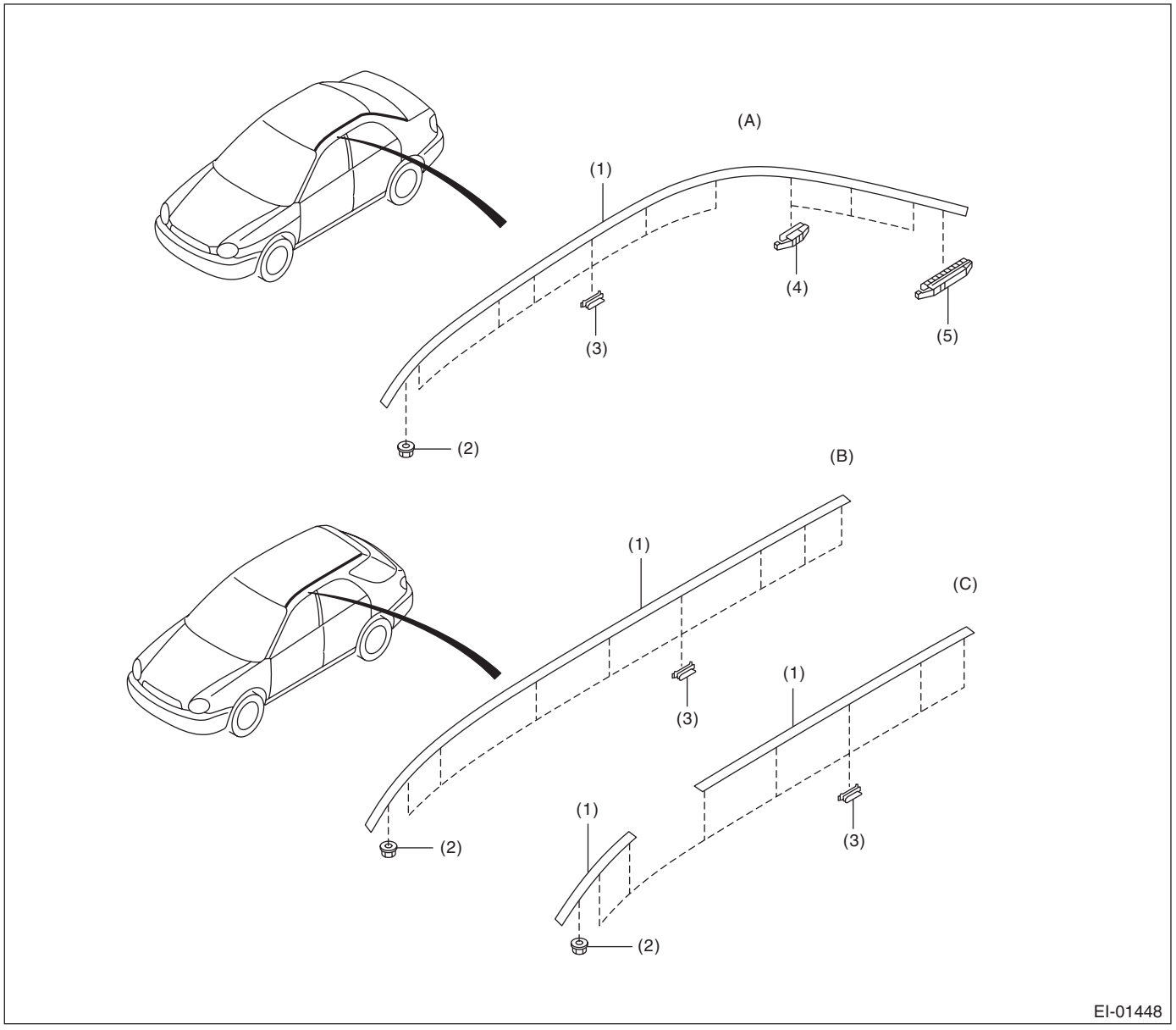

(A)	For sedan model	(B)	For wagon model	(C)	For wagon model (with roof rail)
(1)	Roof molding	(3)	Clip B	(5)	Clip D
(2)	Clip A	(4)	Clip C		

12.ARCH COVER

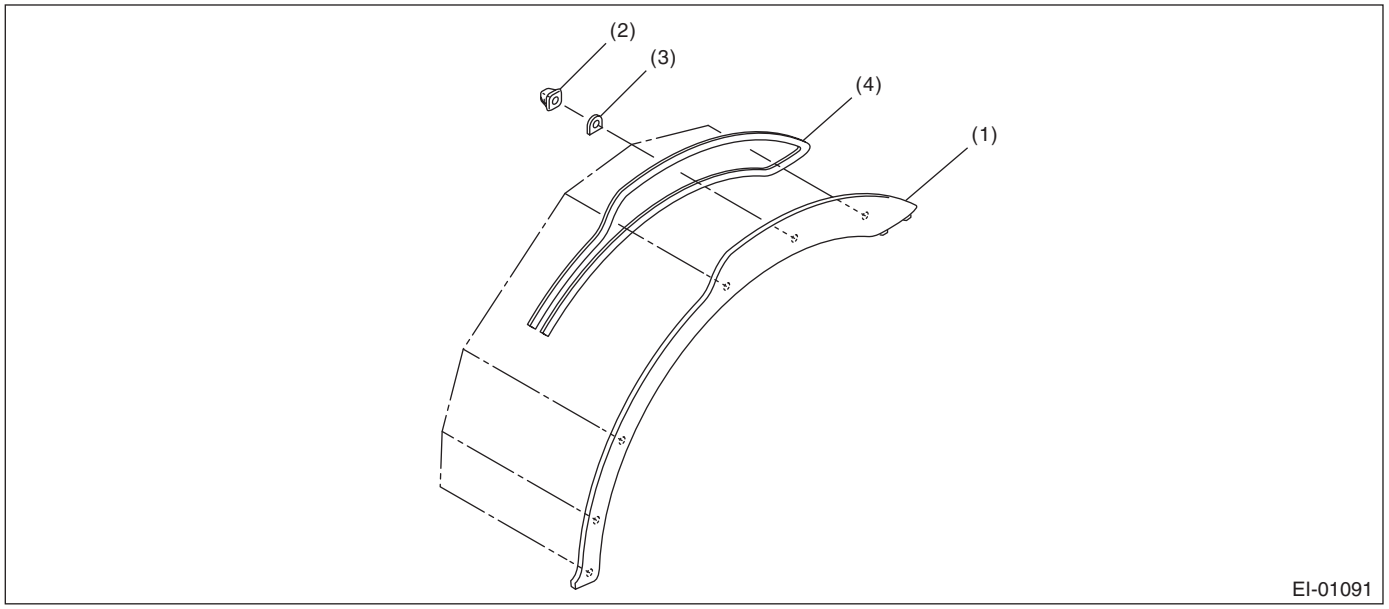

(1) Arch cover
(2) Clip
(3) Cushion
(4) Double-sided tape

13.PROTECTOR

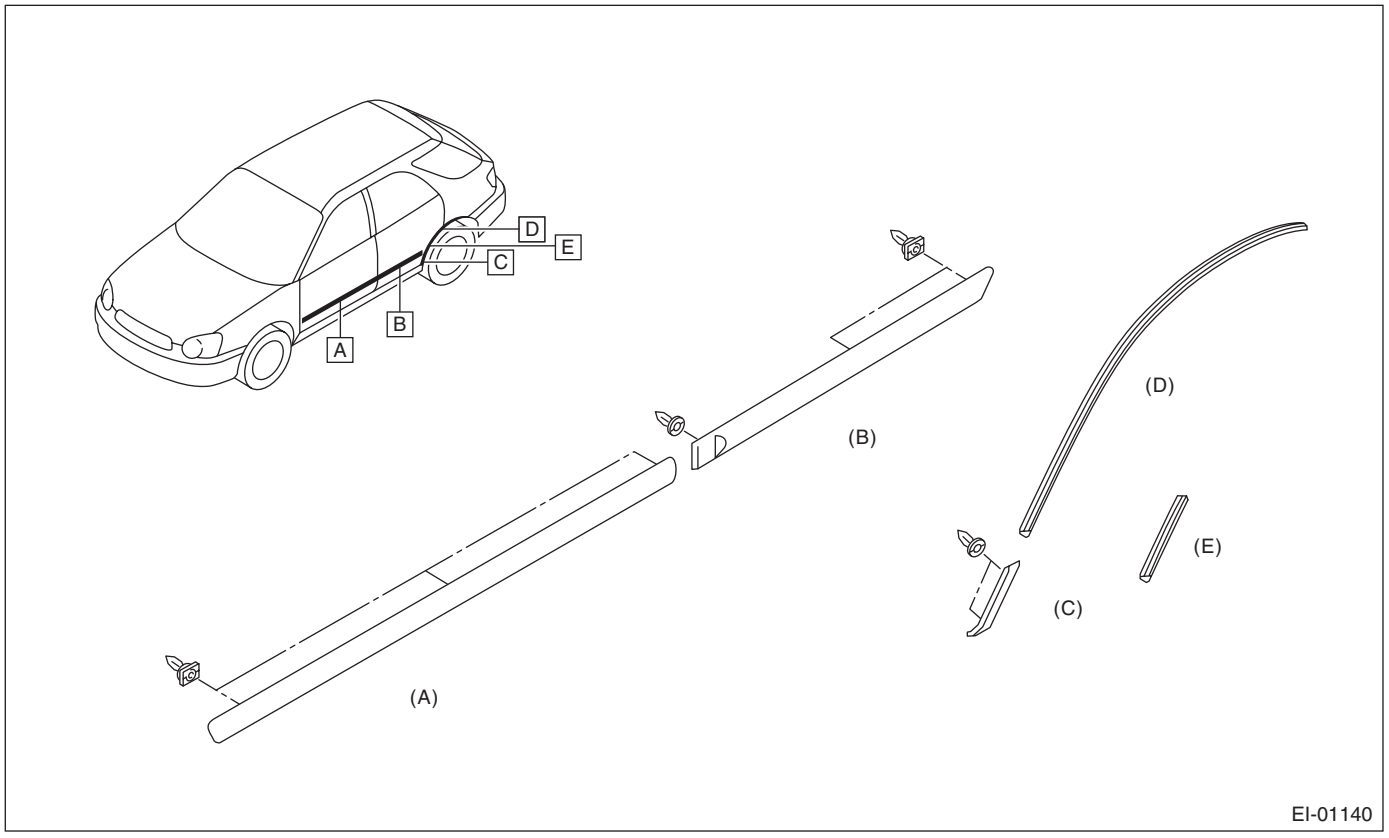

(A) Front door
(B) Rear door
(C) Rear fender lower
(D) Rear fender upper (except for STI model)
(E) Rear fender upper (STI model)

14.DOOR TRIM

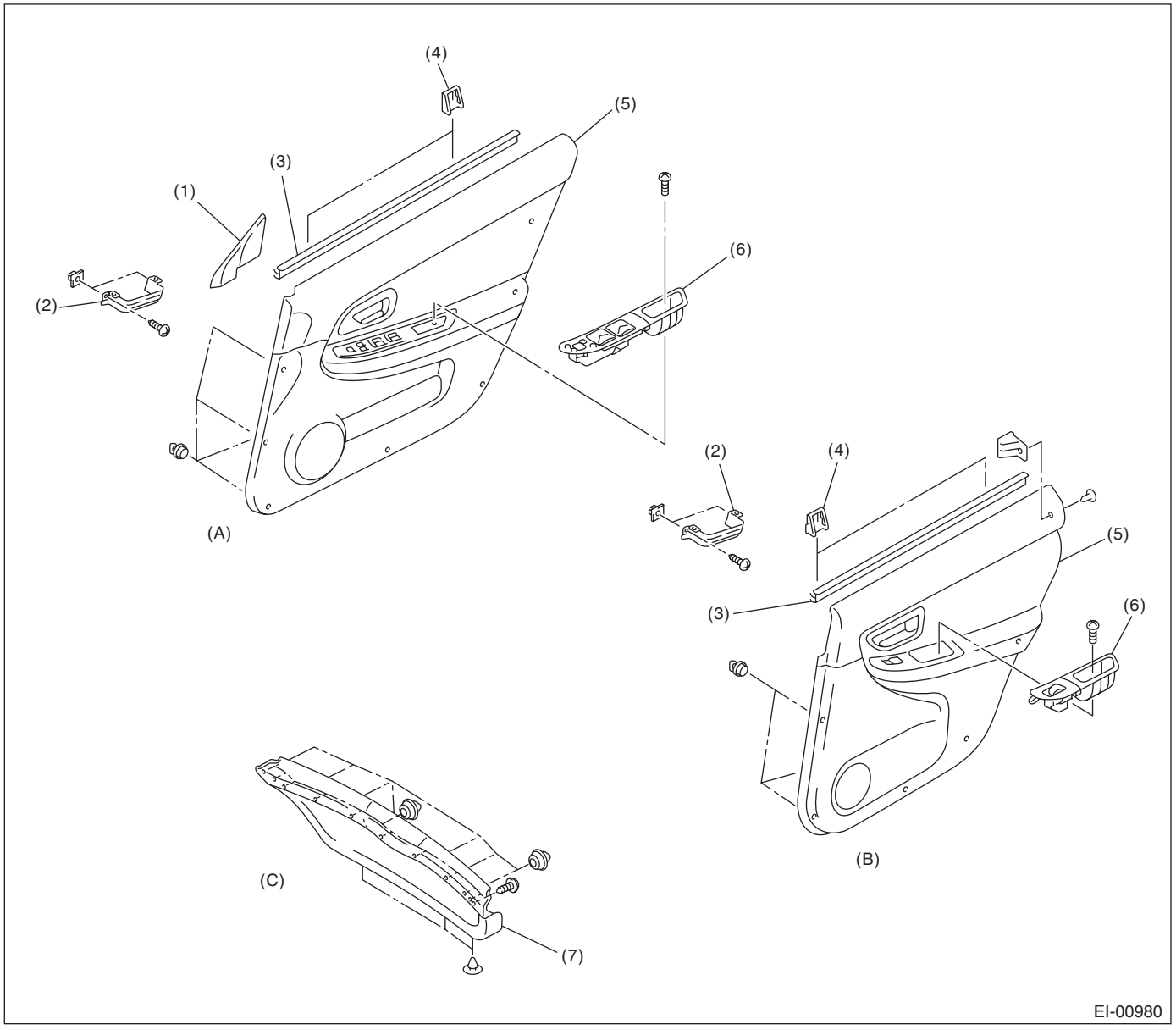

(A)	Front door trim	(B)	Rear door trim	(C)	Rear gate trim
(1)	Gusset cover	(4)	Clip	(6)	Power window switch cover
(2)	Bracket	(5)	Trim panel	(7)	Lower trim
(3)	Upper weather strip				

15.CONSOLE BOX

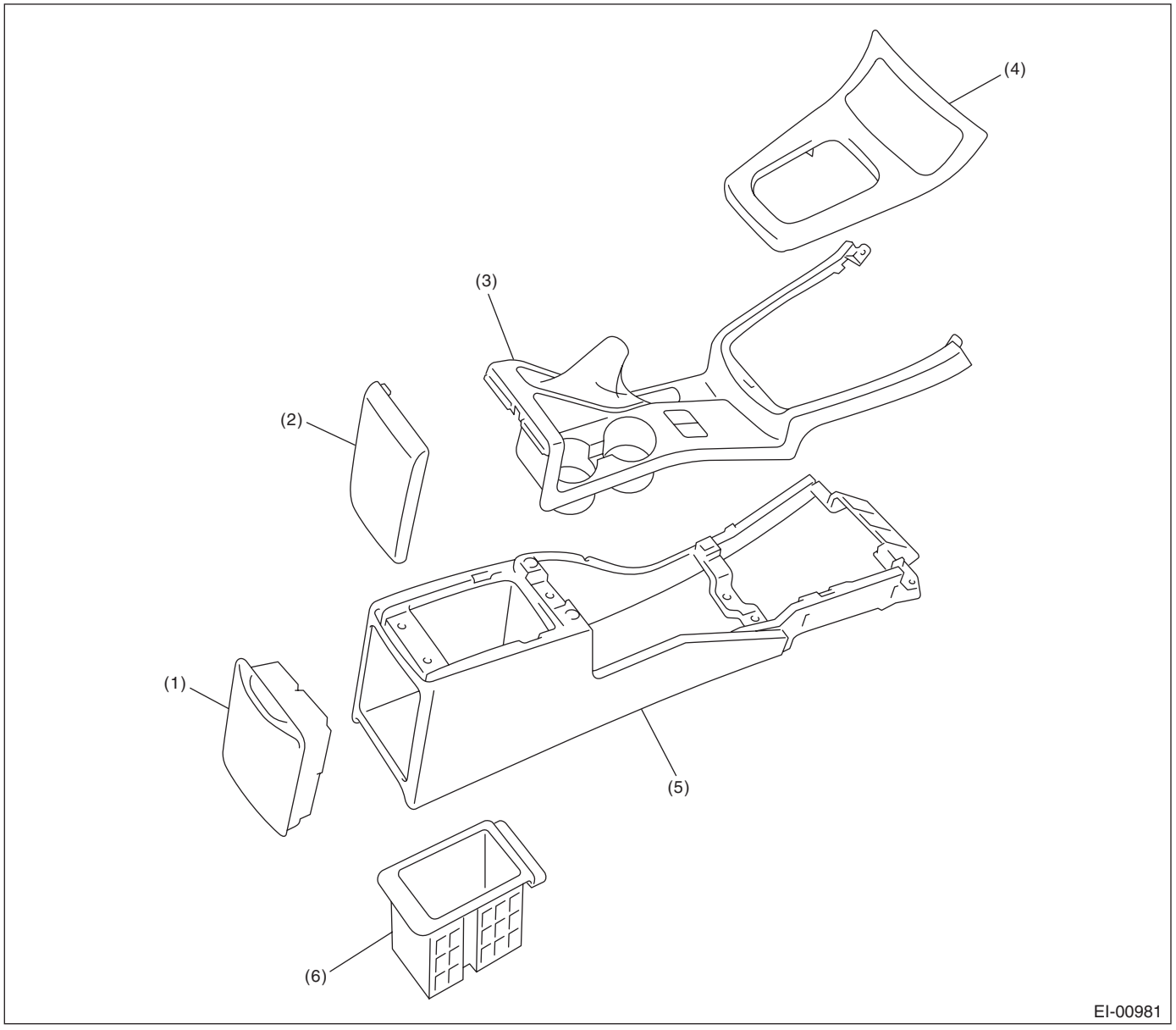

(1)	Rear seat cup holder	(3)	Console cover	(5)	Console box
(2)	Console lid	(4)	Console front panel	(6)	Console pocket

16.INSTRUMENT PANEL

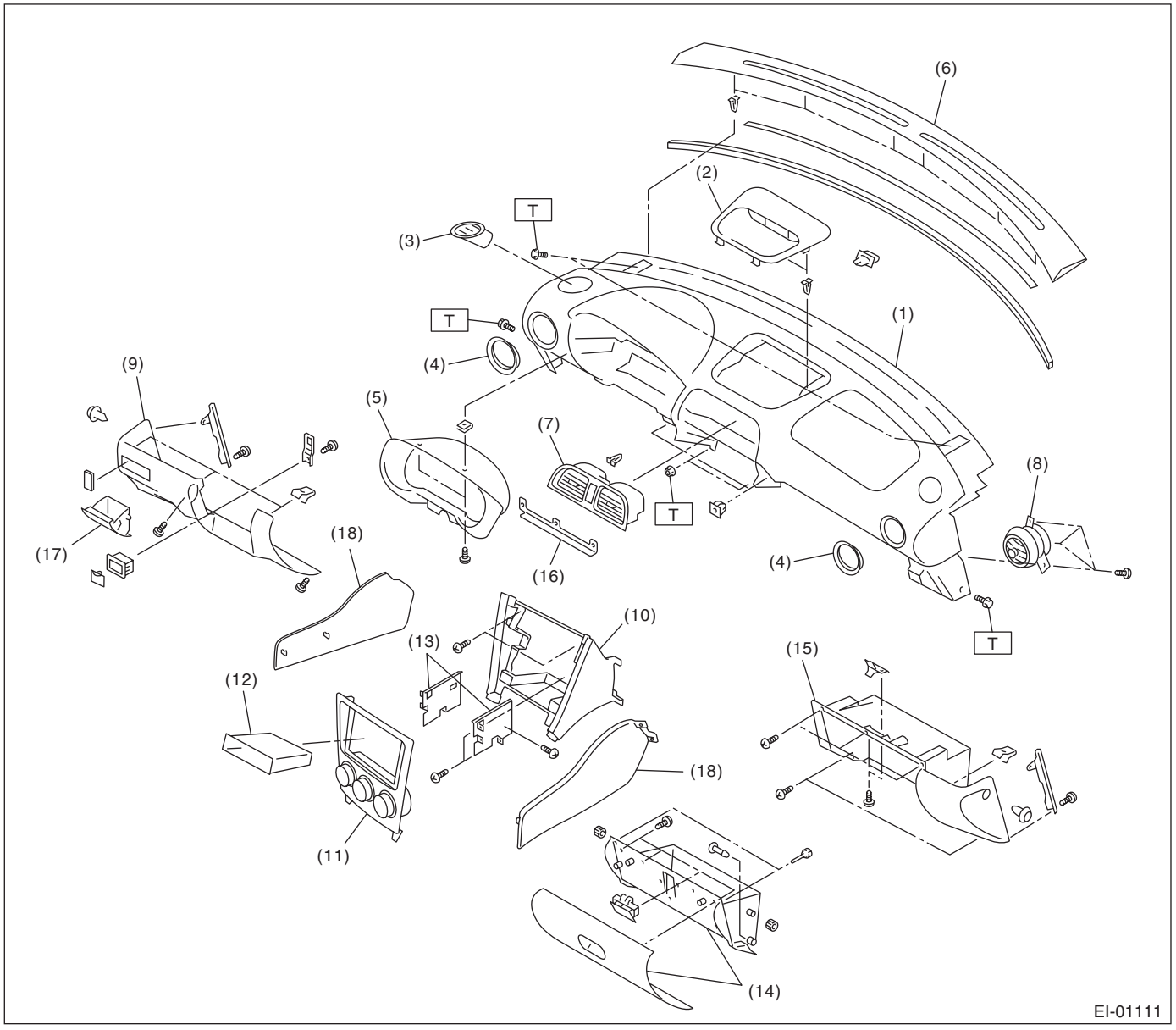

(1)	Pad & frame	(8)	Air vent grille (side)	(15)	Glove box panel
(2)	Center upper panel	(9)	Instrument panel lower cover	(16)	Bracket
(3)	Air vent grille (defroster)	(10)	Console cover	(17)	Coin box
(4)	Grille cover	(11)	Center panel	(18)	Console side panel
(5)	Meter visor	(12)	Center pocket		
(6)	Defroster grille	(13)	Audio bracket		
(7)	Air vent grille (center)	(14)	Glove box lid		

Tightening torque:N·m (kgf-m, ft-lb)

T: 7 (0.71, 5.2)

17.INNER TRIM (SEDAN MODEL)

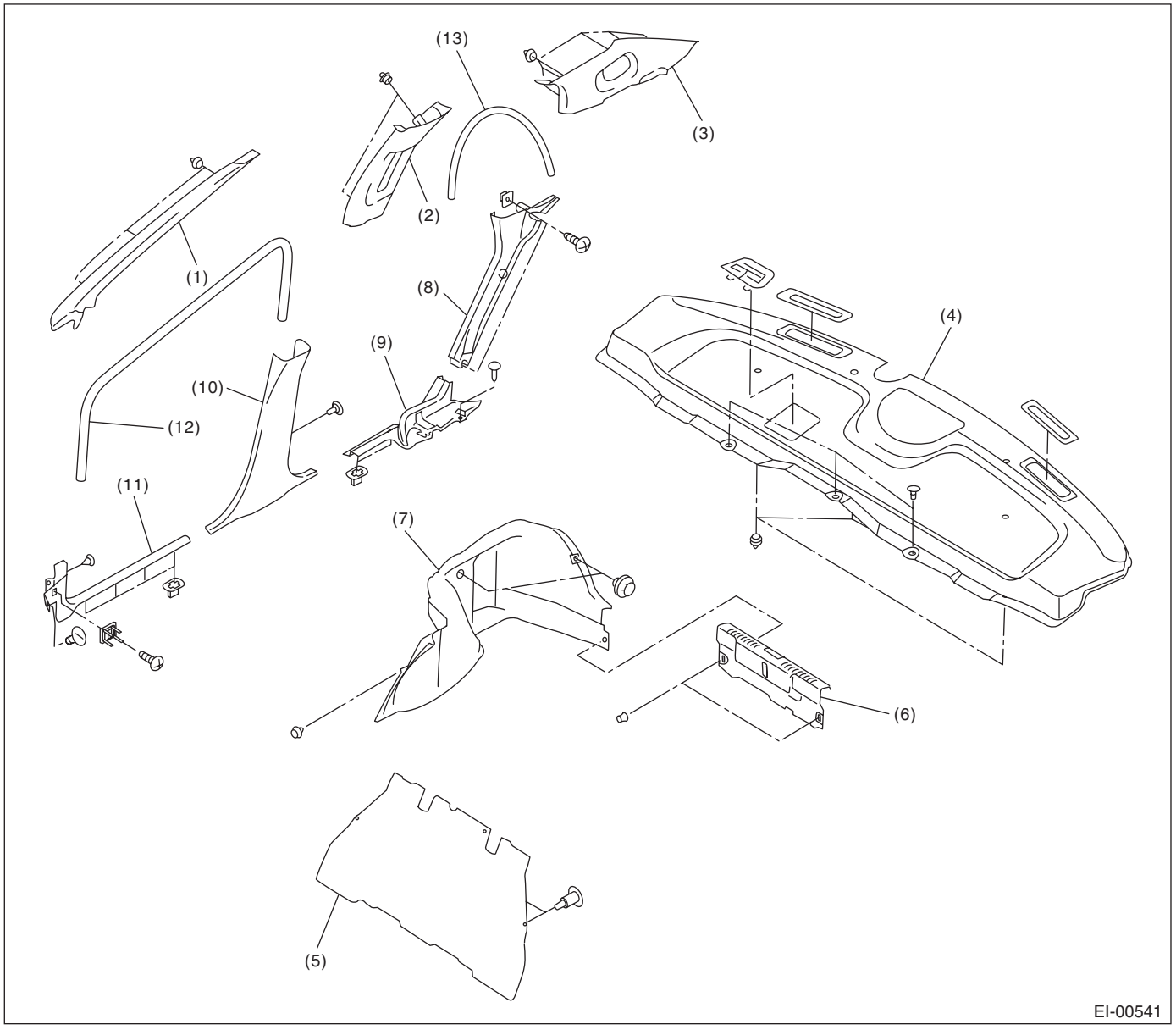

(1)	Front pillar upper trim	(6)	Trunk rear trim	(10)	Center pillar lower trim
(2)	Center pillar upper trim	(7)	Trunk side trim	(11)	Side sill front cover
(3)	Rear pillar upper trim	(8)	Rear pillar lower trim	(12)	Front garnish
(4)	Rear shelf trim	(9)	Side sill rear cover	(13)	Rear garnish
(5)	Rear bulk trim				

18.INNER TRIM (WAGON MODEL)

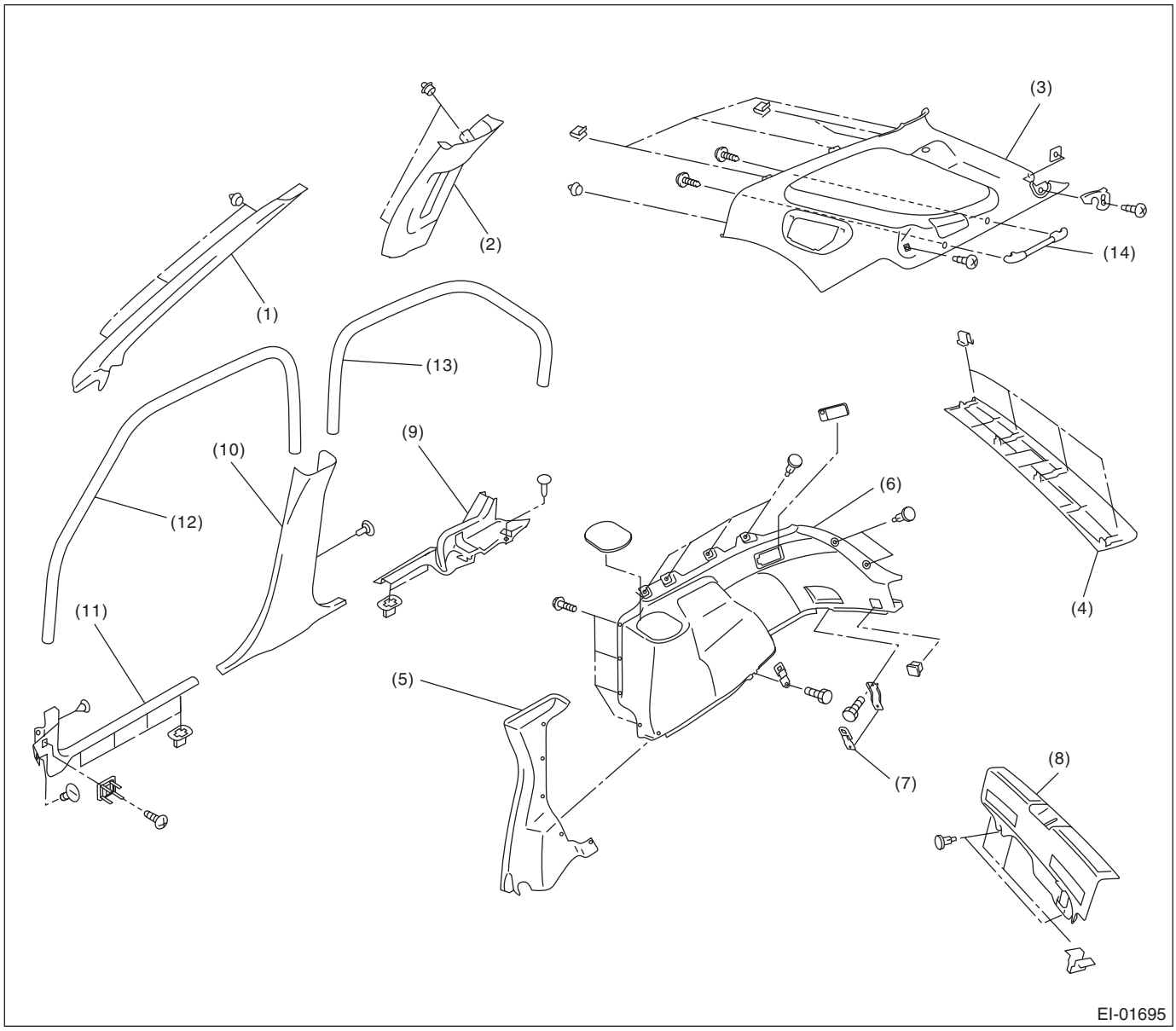

(1)	Front pillar upper trim	(6)	Rear quarter lower trim	(11)	Side sill front cover
(2)	Center pillar upper trim	(7)	Hook	(12)	Front garnish
(3)	Rear pillar upper trim	(8)	Rear skirt trim	(13)	Rear garnish
(4)	Rear rail trim	(9)	Side sill rear cover	(14)	Cargo room side rail
(5)	Rear pillar lower trim	(10)	Center pillar lower trim		

19.ROOF TRIM (SEDAN MODEL)

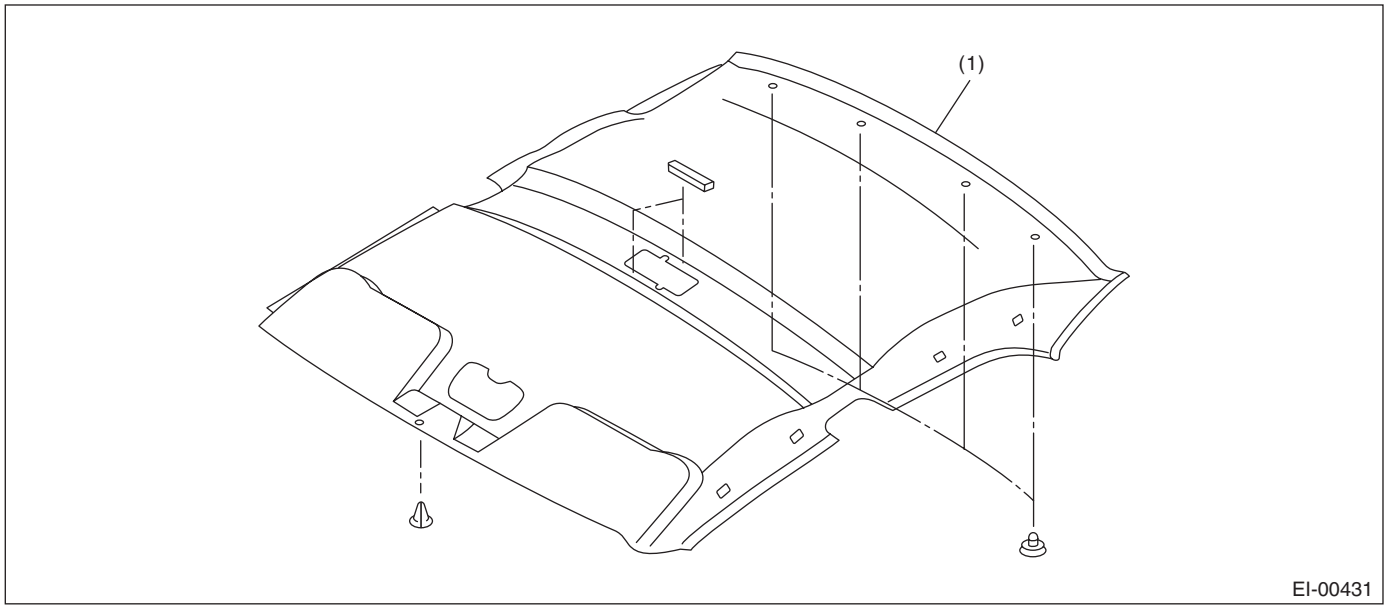

(1) Roof trim

20.ROOF TRIM (WAGON MODEL)

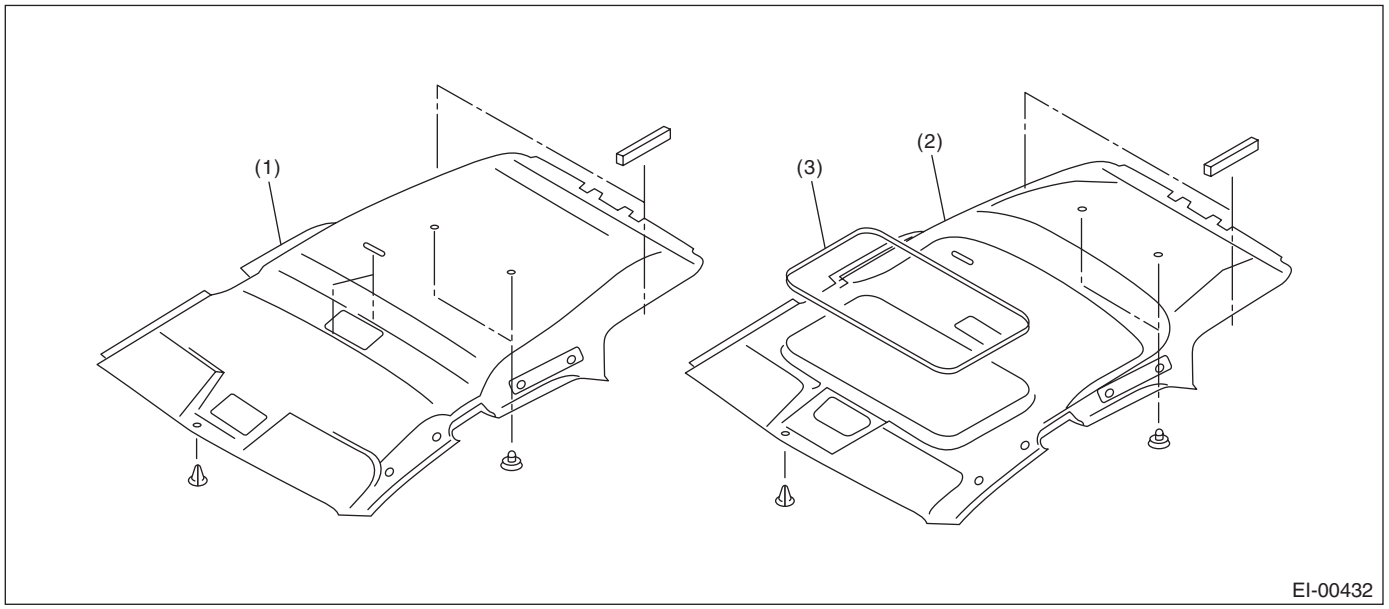

(1) Roof trim (2) Roof trim (model with sunroof) (3) Sun roof garnish

21.LUGGAGE FLOOR MAT

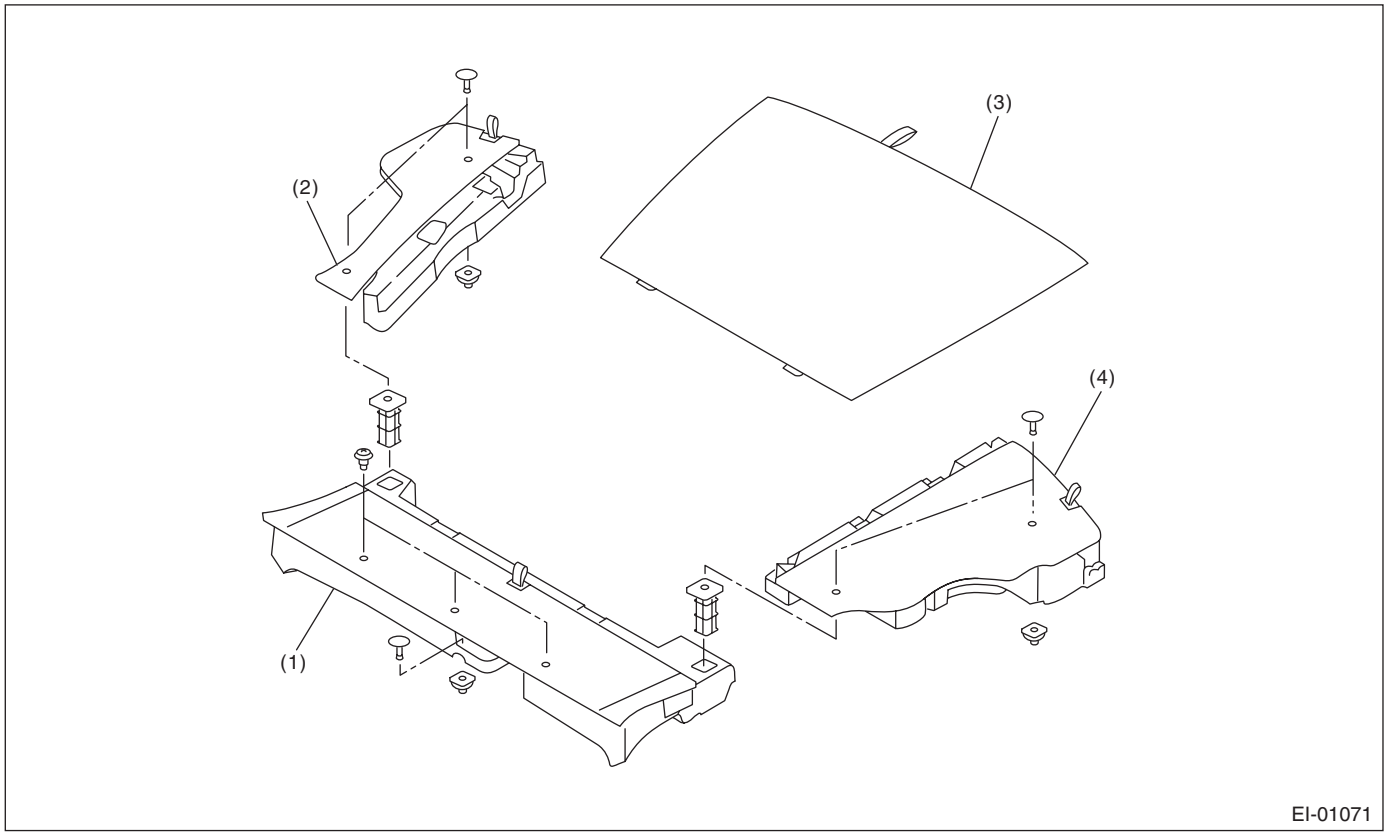

(1) Front floor mat
(2) Side floor mat (RH)
(3) Center floor mat
(4) Side floor mat (LH)

22.HEAT SHIELD COVER

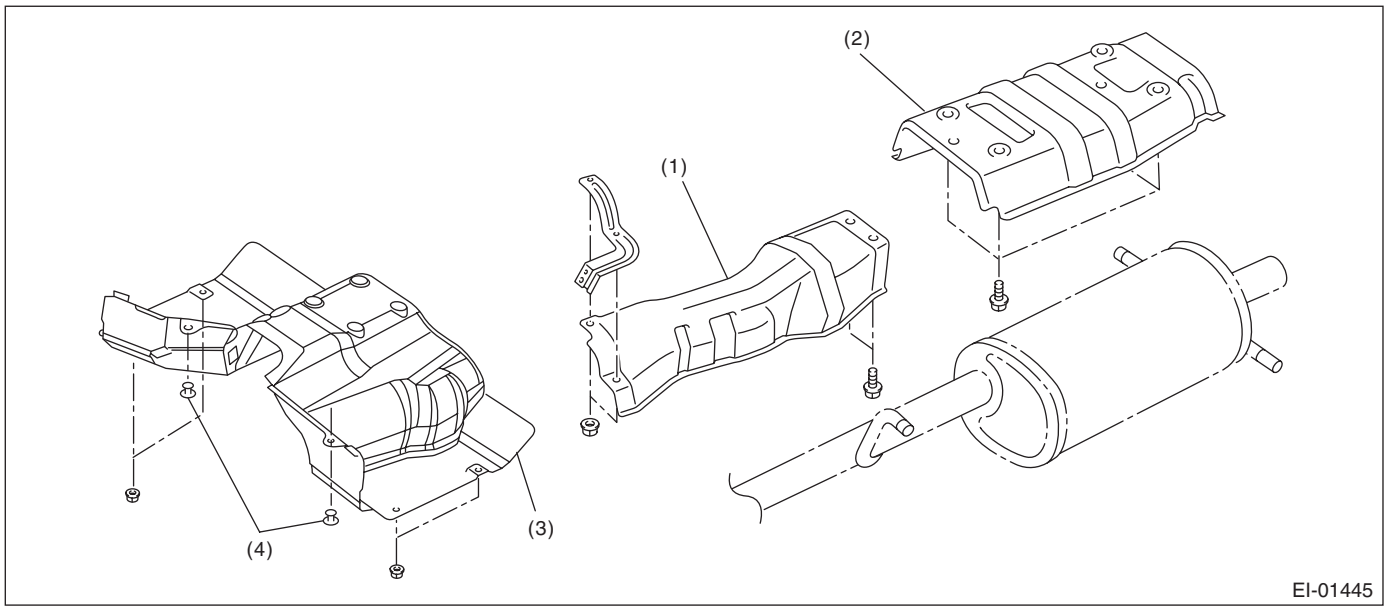

(1) Center heat shield cover
(2) Rear heat shield cover
(3) Center heat shield cover (STI model)
(4) Clip

23.INTERNAL ACCESSORY

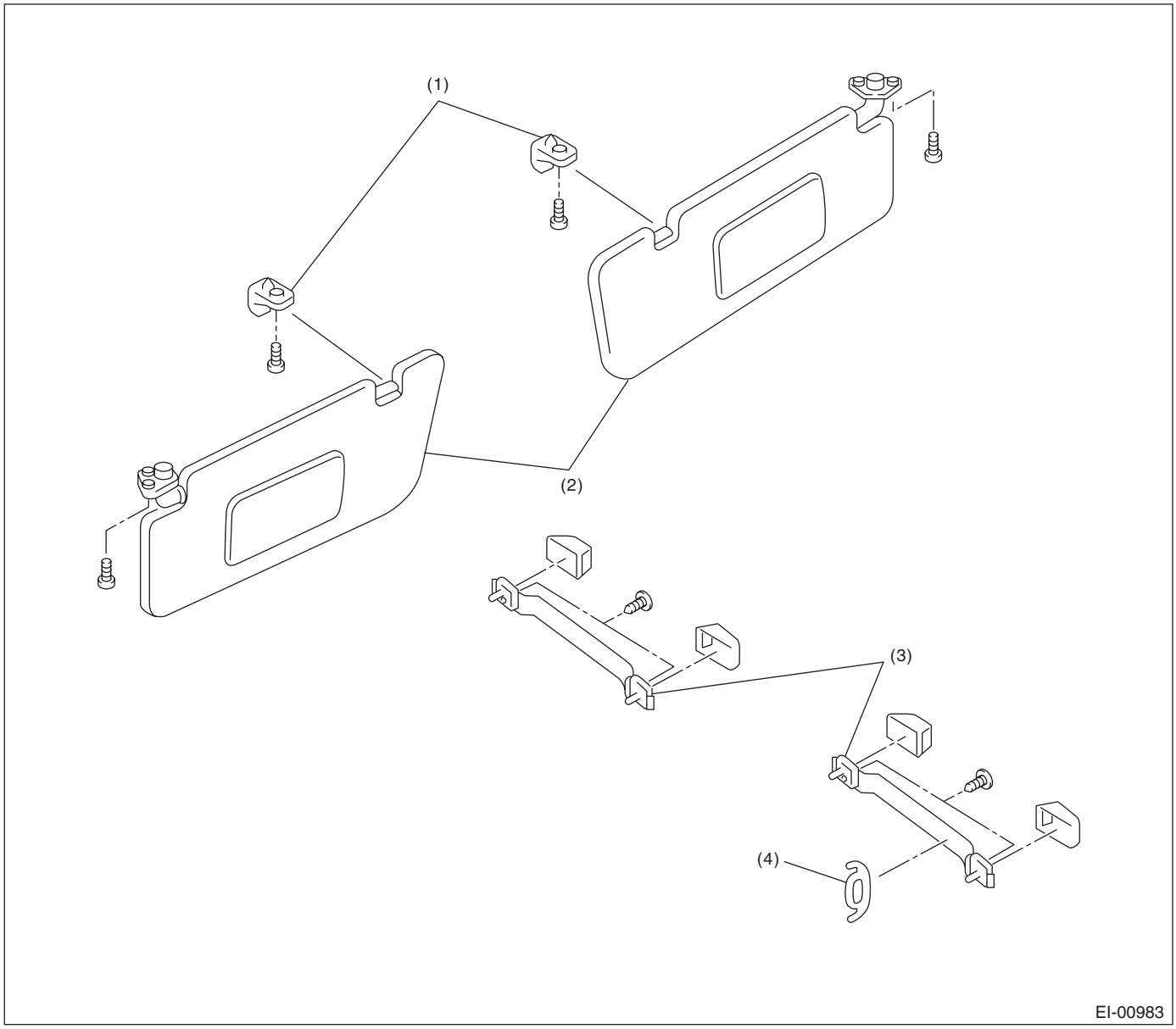

(1) Hook
(2) Sun visor
(3) Assist grip
(4) Coat hook

24.DIFFUSER

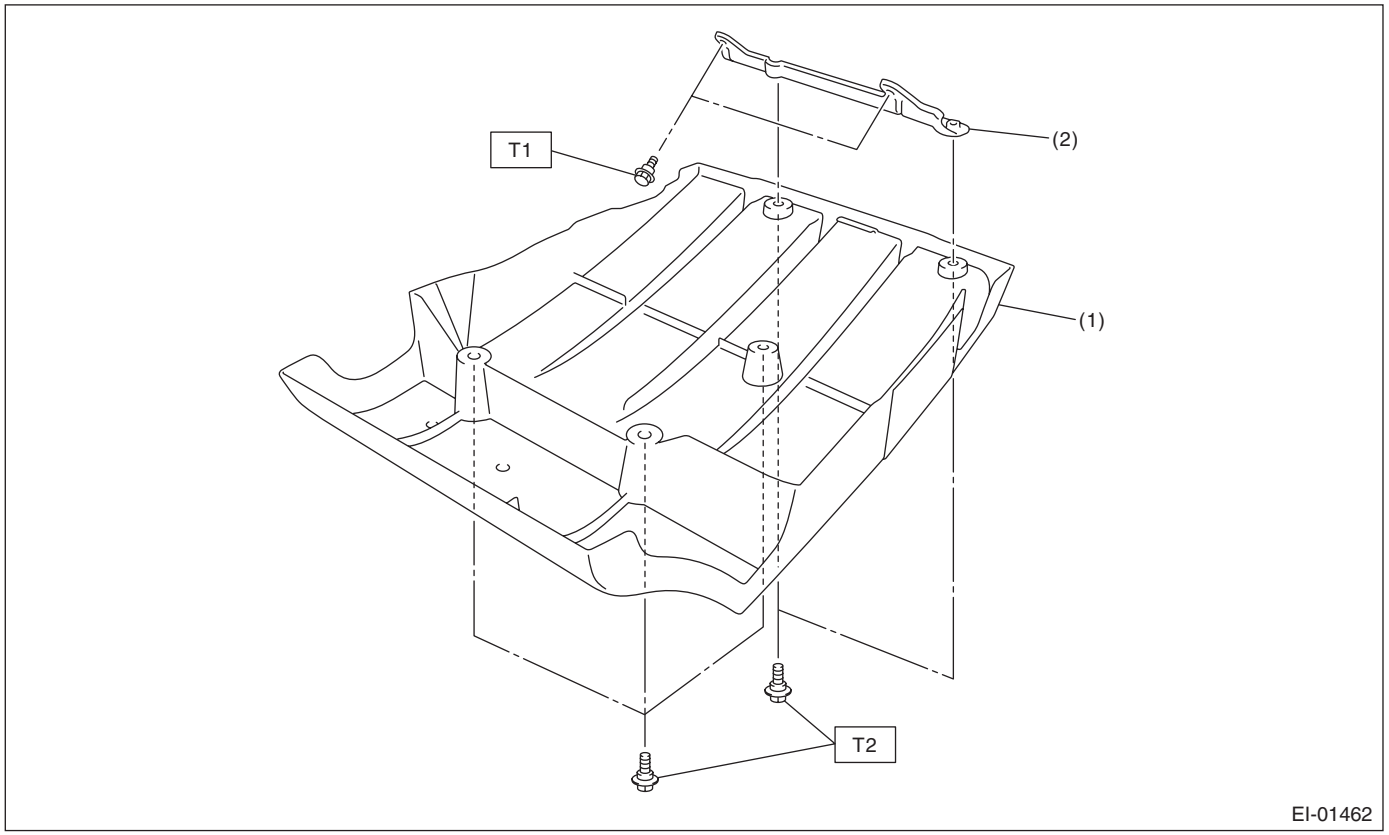

(1) Rear diffuser

(2) Diffuser bracket

Tightening torque:N·m (kgf-m, ft-lb)
T1: 7.5 (0.76, 5.5)
T2: 14 (1.4, 10.3)

B: PREPARATION TOOL

TOOL NAME	REMARKS
Clip remover	Used for removing trim.
Clip clamp pliers	Used for removal of various clips and clamps.